TECHNICAL DATA

Three Phase Electric Motors - Cast Iron Frame
UM3C 250M-6 IE3
37 kW / 50 Cv
990 RPM

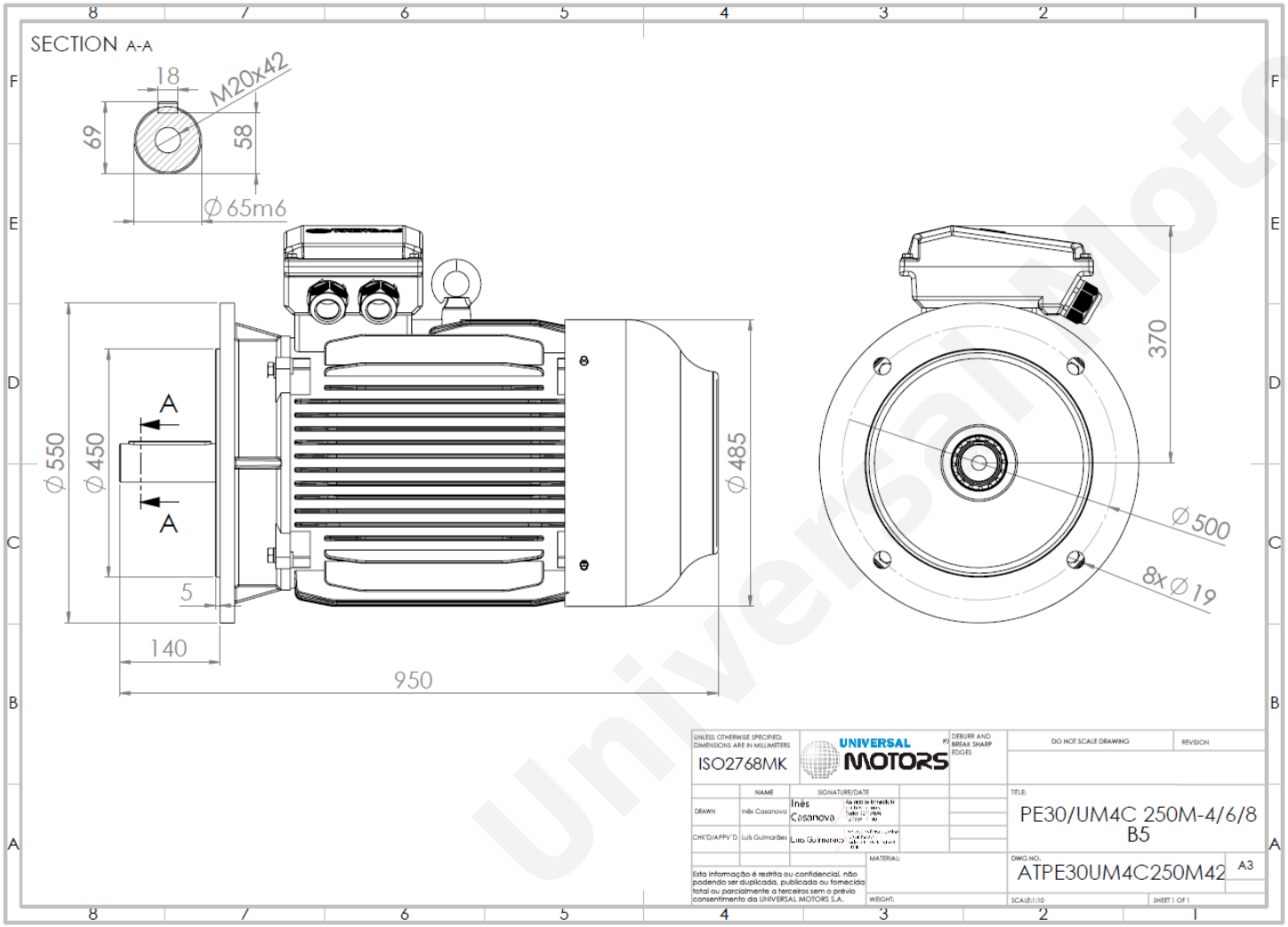

Motor type:	**UM3C 250M-6 IE3**
Output:	**37 kW / 50 Cv**
Speed (min^{-1}):	**990 RPM**
Voltage:	**400 V**
Frequency:	**50 Hz**
Current:	**68.1 A**
Power factor (Cos Ø):	**0.84**
Poles:	**6**
Insulation class:	**F**
Temperature rise Class:	**B**
Efficiency 50%:	**92.7 %**
Efficiency 75%:	**93.7 %**
Efficiency 100%:	**93.4 %**
Torque:	**357 N.m**
Tstarting/Tnominal:	**2.0**
Istarting/Inominal:	**7.1**
Tmaximum/Tnominal:	**2.1**
Noise:	**76 Db(A)**
Weight:	**416 Kg**
Bearing DE:	**6314 C3**
Bearing NDE:	**6314 C3**

Regime - S1 **Altitude - 1000m** **Environment Temperature - 40ºC**

* References applied only in the UK

CONTACTS:
Universal Motors UK, Ltd
Unit E2, Meltham Mills Industrial Estate, Meltham Mills Road, Meltham, Holmfirth
West Yorkshire HD9 4AR, U.K
Tel: +44(0) 1484 660 222
Fax: +44(0) 1484 660 333
Mail: enquiries@universalmotors-group.co.uk

Universal Motors