TECHNICAL DATA

Three Phase Electric Motors - Aluminum Frame
UM3A 160M-2 IE3
11 kW / 15 Cv
2940 RPM

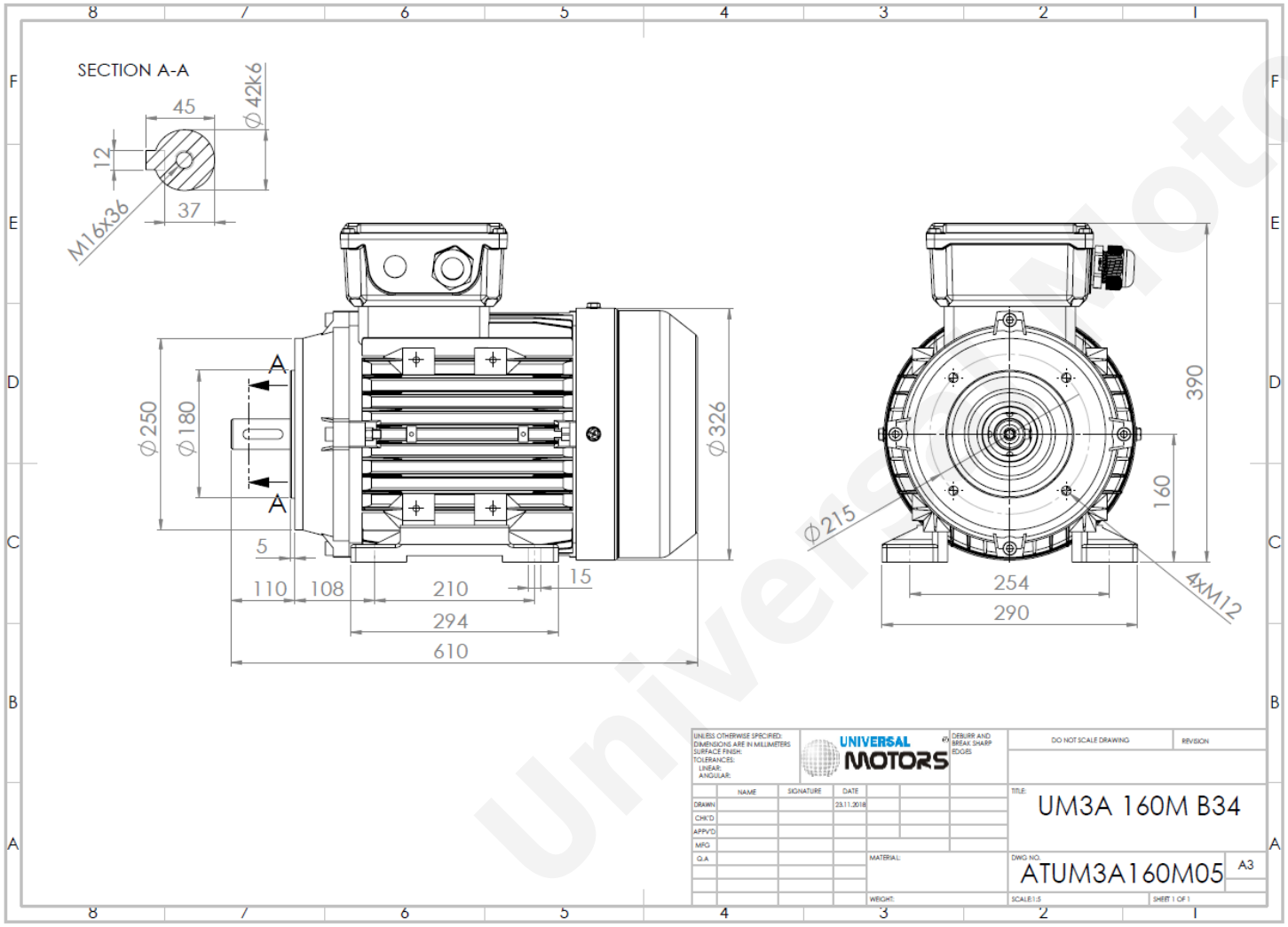

Motor type:	**UM3A 160M-2 IE3**
Output:	**11 kW / 15 Cv**
Speed (min^{-1}):	**2940 RPM**
Voltage:	**400 V**
Frequency:	**50 Hz**
Current:	**19.6 A**
Power factor (Cos Ø):	**0.89**
Poles:	**2**
Insulation class:	**F**
Temperature rise Class:	**B**
Efficiency 50%:	**89.4 %**
Efficiency 75%:	**90.3 %**
Efficiency 100%:	**91.2 %**
Torque:	**35.7 N.m**
Tstarting/Tnominal:	**2.2**
Istarting/Inominal:	**7.9**
Tmaximum/Tnominal:	**2.3**
Noise:	**87 Db(A)**
Weight:	**90 Kg**
Bearing DE:	**6309 2Z C3**
Bearing NDE:	**6309 2Z C3**

Regime - S1 **Altitude - 1000m** **Environment Temperature - 40ºC**

* References applied only in the UK

CONTACTS:
Universal Motors UK, Ltd
Unit E2, Meltham Mills Industrial Estate, Meltham Mills Road, Meltham, Holmfirth
West Yorkshire HD9 4AR, U.K
Tel: +44(0) 1484 660 222
Fax: +44(0) 1484 660 333
Mail: enquiries@universalmotors-group.co.uk

Universal Motors