TECHNICAL DATA

Three Phase Electric Motors - Aluminum Frame
UM3A 90L-2 IE3
2.2 kW / 3 Cv
2845 RPM

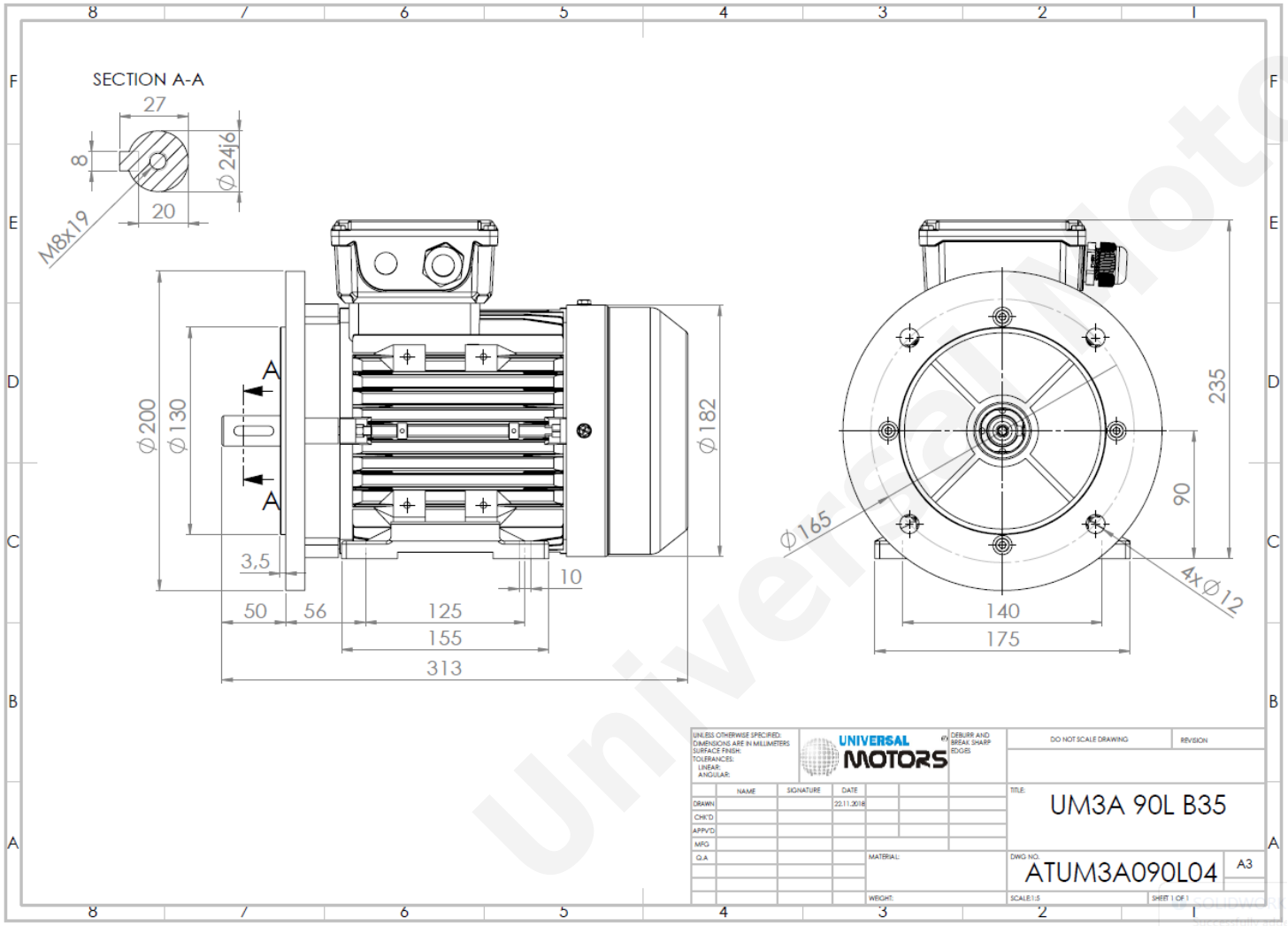

Motor type:	**UM3A 90L-2 IE3**
Output:	**2.2 kW / 3 Cv**
Speed (min^{-1}):	**2845 RPM**
Voltage:	**400 V**
Frequency:	**50 Hz**
Current:	**4.4 A**
Power factor (Cos Ø):	**0.85**
Poles:	**2**
Insulation class:	**F**
Temperature rise Class:	**B**
Efficiency 50%:	**83.8 %**
Efficiency 75%:	**84.6 %**
Efficiency 100%:	**85.9 %**
Torque:	**7.38 N.m**
Tstarting/Tnominal:	**2.3**
Istarting/Inominal:	**7.8**
Tmaximum/Tnominal:	**2.3**
Noise:	**78 Db(A)**
Weight:	**16 Kg**
Bearing DE:	**6205 2Z C3**
Bearing NDE:	**6204 2Z C3**

Regime - S1 **Altitude - 1000m** **Environment Temperature - 40ºC**

* References applied only in the UK

CONTACTS:
Universal Motors UK, Ltd
Unit E2, Meltham Mills Industrial Estate, Meltham Mills Road, Meltham, Holmfirth
West Yorkshire HD9 4AR, U.K
Tel: +44(0) 1484 660 222
Fax: +44(0) 1484 660 333
Mail: enquiries@universalmotors-group.co.uk